ROCKWOOL®

RW Semi Rigid & Rigid Slabs

Versatile building slabs for a wide range of general building applications

ROCKWOOL RW semi-rigid and rigid slabs are high quality resin bonded slabs that can be used for thermal and acoustic insulation in general building applications. The slabs are available in a wide range of thicknesses and densities to suit most requirements and are CE marked to EN 13162

RW Semi Rigid & Rigid Slabs

Advantages

- Excellent thermal, acoustic and fire insulation
- Suitable for a wide range of general building applications
  Euroclass A1 to BS EN 13501-1
- Easy to handle and install
- Non-hygroscopic
- No maintenance
- Black or white tissue and aluminium foil facings available

Standards and approvals

ROCKWOOL RW Slabs conform to: BS EN 13162:2012: Thermal insulation products for buildings. Factory made mineral wool (MW) products.

Applications

ROCKWOOL RW slabs can be used for a wide range of general building applications which include acoustic insulation for partitions and ceilings as well as thermal insulation for floors, walls, and roofs

Note:

- For HVAC applications refer to the HVAC Specification Guide
- For Industrial applications, relating to high temperature services, offshore & petrochemical,etc. please visit our ProRox product range on www. rockwool-rti. co.uk

Facings

RW slabs are also available with number of facing options, which are:

- Non-woven mineral black tissue (75gsm)
- Non-woven mineral white tissue (100gsm)
- Aluminium foil

Performance

Fire

All ROCKWOOL RW slab products, either un-faced or with an aluminium foil or glass fleece on one or both surfaces, achieve an A1 classification in accordance with BS EN 13501-1 and therefore comply with the requirements of non-combustible materials/products, as defined in all UK and Ireland Building Regulations.

Water resistance

ROCKWOOL RW Slabs are highly water repellent and non-hygroscopic

Thermal performance

For general building applications (Lambda 90:90) at temperature 10°C:
ROCKWOOL RWA45 slab = 0.035 W/mK
ROCKWOOL RW3 slab = 0.034 W/mK
ROCKWOOL RW5 slab = 0.034 W/mK

Bending radius of RW slabs

The table below gives the minimum bending radius for ROCKWOOL RW slabs.

Bending to smaller radii can deform the product and increase the installation time.

Slab type	Slab thickness (mm)					
	30	40	50	60	75	100
RWA45	425	500	700	900	1200	1800
RW3	425	500	700	1000	1350	1900
RW5	550	700	1000	1500	2250	2500

RW Semi Rigid & Rigid Slabs

Dimensions

All standard un-faced slabs are manufactured 1200 x 600mm. All foil faced and tissue faced slabs are manufactured 1000 x 600mm.

The standard thickness range of ROCKWOOL RW slabs are shown in the table below.

Product	Nominal density kg/m³	Dimension (mm)	Thickness (mm)
RWA45	45	1200 x 600	30, 40, 50, 60, 75, 100
RW3	60	1200 x 600	30*, 40, 50, 60, 75 & 100
RW5	100	1200 x 600	25, 30*, 40, 50, 60, 75 & 100

* Denotes thickness also available as 'standard' with white or black tissue facing (not foil facing). All foil faced and tissue faced slabs (other than shown above) are non -standard and will be subject to minimum order quantities.

Acoustics

Acoustic performance

ROCKWOOL stone wool products work in two distinct ways to reduce noise, either by impeding the transmission of sound through an element of the structure or by absorption of sound at the surface.

Noise absorption is expressed as a factor between 0 and 1.0. The more sound that a surface absorbs, the higher its absorption coefficient.

The structure of the fibres in ROCKWOOL RW slabs make them ideal for use as a sound absorber, with characteristically high coefficients over a wide frequency range (see table below).

Absorption coefficients for RW slabs

Product	Thickness (mm)	Mounting	Mounting Frequency (Hz)					
			125	250	500	1K	2K	4K
RWA45	50	direct	0.20	0.50	0.85	1.00	1.00	1.00
RWA45	60	direct	0.30	0.70	1.00	1.00	1.00	1.00
RW3	50	direct	0.11	0.60	0.96	0.94	0.92	0.82
RW3	75	direct	0.34	0.95	1.00	0.82	0.87	0.86
RW5	30	direct	0.10	0.40	0.80	0.90	0.90	0.90
RW5	75	direct	0.40	0.75	0.90	0.80	0.90	0.85

Note: Differences in coefficients of less than 0.15 are not significant. The absorption coefficients shown above are typical figures that can be achieved by un-faced RW slabs.

Internal partitions

Dwellings

In England and Wales, Approved Document E requires all internal walls between a bedroom or room containing a WC and another room to have a minimum sound insulation of 40 Rw dB This applies to new walls built both in dwellings formed by a material change of use and new build extensions of existing dwellings. (For Scotland, the minimum sound insulation requirement is 43 Rw dB).

Schools

Specific performance standards are set for airborne sound insulation between spaces by Building Bulletin 93 (December 2014) 'The Acoustic Design of Schools'. This classifies each room for the purpose of airborne sound insulation by its activity purpose and sets the minimum sound insulation performance standards for each partition.

Hospitals

Similarly to schools the Healthcare Technical Manuals HTM 08-01 (previously HTM 2045) sets standards for privacy according to room type and from this the specific performance requirement for any partition can be obtained.

Fire performance requirements for internal partitions

Generally fire performance of partitions will be determined in line with the appropriate Building Regulations. In certain buildings there may be specific fire performance requirements for partitions separating specific room types, for example in Hospitals where this is set by Firecode HTM 05-02 and Building Bulletin 100 Design for fire safety in schools.

ROCKWOOL products also help to improve the fire rating of a partition by limiting the transfer of heat across the cavity.

RW Semi Rigid & Rigid Slabs

Party walls - steel frame party wall

Typical Twin light steel frame construction
Two separate steel frame walls are constructed. Minimum 60mm RWA45 slabs are slotted into the cavity between the two steel frames and butt jointed. (Note actual thickness of insulation will be determined by the as built cavity width between each frame)
The rows of slabs should be laid `broken bond` to avoid coincident vertical joints.

Fully fill the depth of the frame on both sides with 75mm RWA45 slabs, (or thickness to suite stud depth) with no gaps between the insulation slabs.

Wall linings: 2 layers of gypsum plasterboard each side of the party wall, with all joints staggered, to provide a total nominal mass per unit area of 22kg/m^2 both sides. A minimum width of 200mm is required between the inner faces of plasterboard lining.

Seal all joints in outer leaf with Joint Tape or caulk sealant. NOTE This wall construction requires pre-completion testing.

ROCKWOOL ancillary products: To meet fire, acoustic and thermal regulations cavity barriers must be installed at the interface junction between the steel frame party wall with the external cavity wall. (For further information, please refer to the ROCKWOOL Cavity Barrier data sheet).

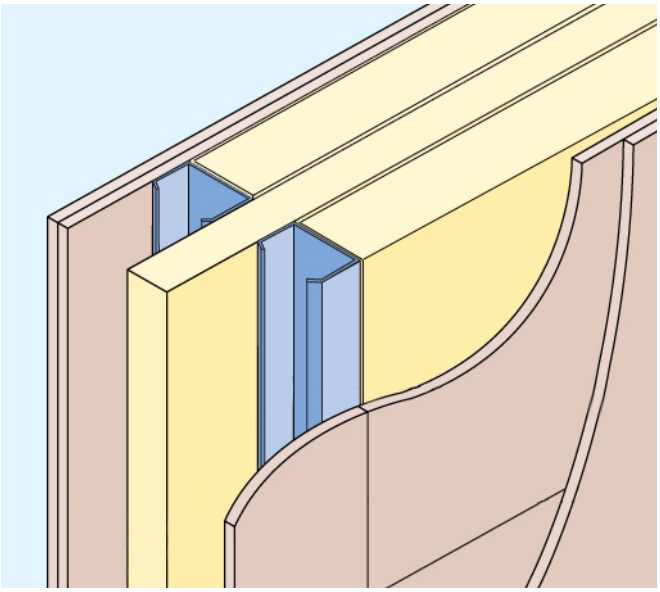

RW Semi Rigid & Rigid Slabs

Acoustic Solutions for Internal metal stud partition walls

Lightweight 50mm metal partition - Rw 41dB

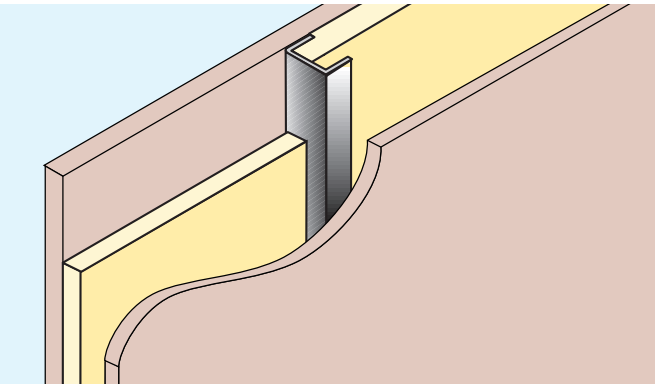

Studs: 50mm metal 'C 'studs @ 600mm centres
Facings: 1 layer of 12.5mm standard plasterboard (total mass per unit area 8.0kg/m² each side)
Insulation: 30mm ROCKWOOL RW3 slab

Results

Weighted sound reduction:	Rw 41dB
Fire resistance :	30 minutes
Maximum height :	2.5 metres
Nominal wall thickness:	75mm
Approx .weight :	18kg/m²

This ROCKWOOL solution exceeds the minimum requirements of the Approved Document E for a Rw 40dB internal wall partition in dwellings.

Lightweight 50mm metal partition - Rw 43dB

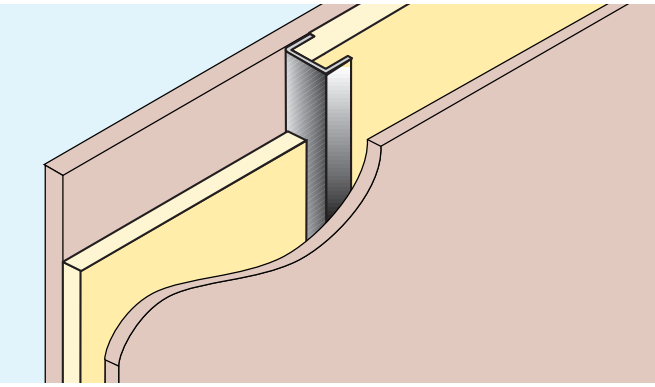

Studs: 50mm metal 'C' studs @ 600mm centres
Facings: 1 layer of 12.5mm acoustic plasterboard (total mass per unit area 10kg/m² each side)
Insulation: 30mm ROCKWOOL RW3 slab

Results

Weighted sound reduction:	Rw 43dB
Fire resistance :	30 minutes
Maximum height :	2.5 metres
Nominal wall thickness:	75mm
Approx .weight :	22kg/m²

This ROCKWOOL solution also meets the minimum requirements for a Rw 43dB as required by Section 5 of the Scottish Technical Standards for internal wall partition in dwellings.

Lightweight 70mm metal partition - Rw 44dB

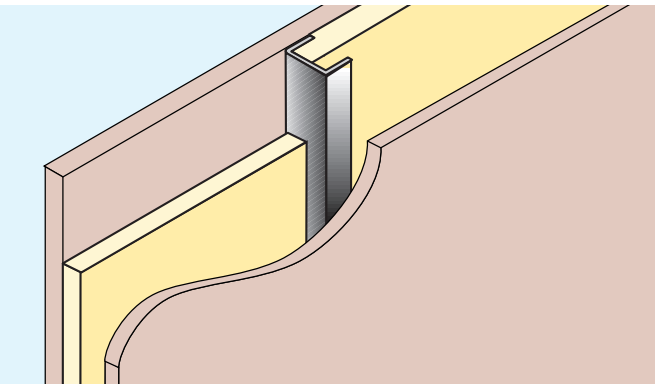

Studs: 70mm metal C studs @ 600mm centres
Facings: 1 layer of 12.5mm standard plasterboard (total mass per unit area 8.0kg/m² each side)
Insulation: 50mm ROCKWOOL RWA45 slab

Results

Weighted sound reduction:	Rw 44dB
Fire resistance :	30 minutes
Maximum height :	3.6 metres
Nominal wall thickness:	95mm
Approx .weight :	19kg/m²

This ROCKWOOL solution is suited to general offices and other general purpose uses.

RW Semi Rigid & Rigid Slabs

Lightweight 70mm metal partition - Rw 50dB

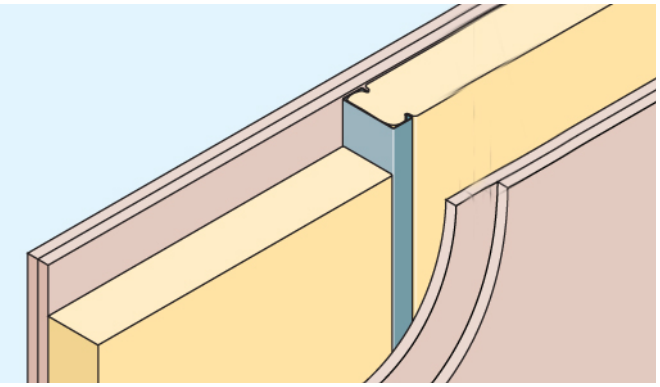

Studs: 70mm metal C studs @ 600mm centres
Facings: 2 layers of 12.5mm standard plasterboard (total mass per unit area 16.0kg/m² each side)
Insulation: 50mm ROCKWOOL RWA45 slab

Results

Weighted sound reduction:	Rw 50dB
Fire resistance:	60 minutes
Maximum height:	4.6 metres
Nominal wall thickness:	120mm
Approx .weight :	36kg/m²

This ROCKWOOL solution is suited to board rooms, offices and classrooms etc.

Lightweight 70mm metal partition - Rw 55dB

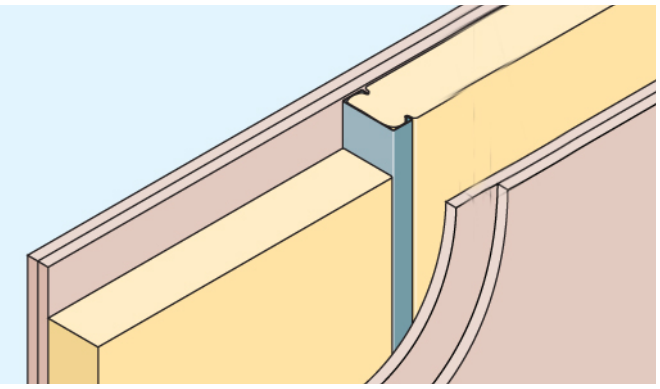

Studs: 70mm metal C studs @ 600mm centres
Facings: 2 layers of 12.5mm acoustic plasterboard (total mass per unit area 20.0kg/m² each side)
Insulation: 50mm ROCKWOOL RWA45 slab

Results

Weighted sound reduction:	Rw 55dB
Fire resistance:	60 minutes
Maximum height:	4.6 metres
Nominal wall thickness:	120mm
Approx .weight :	43kg/m²

This ROCKWOOL solution is suited to Lecture theatres, Conference rooms, etc.

Acoustic upgrade of existing solid masonry wall to party wall standard

This ROCKWOOL solution meets the requirements of ADE Section 4 'Material change of use' Wall treatment 1

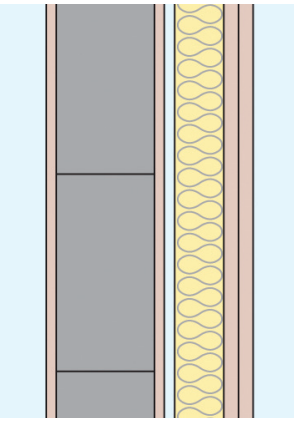

Minimum Required performance standard DnTw +Ctr = 43 dB (or greater)

Existing wall: min.100mm existing solid masonry wall plastered on both faces
Studs: Independent 50mm metal 'C' studs (leaving a minimum 10mm air space between the back of the stud and the existing wall)
Insulation: min 40mm ROCKWOOL RWA45 slab between studs
Facings: 2 layers of 12.5mm standard plasterboard (8.2kg/m² per board) with staggered joints between boards.
Finishes: Plaster skim coat
Total mass per unit area ,excluding framework - 20.0kg/m²

- If existing masonry wall is not plastered or is less than 100mm thick then independent panels should be applied to both sides.
- Seal all gaps at the perimeter of the plasterboard lining and where services, such as electrical sockets, penetrate the plasterboard with ROCKWOOL Intumescent Acoustic sealant.
- This solution is only suitable for refurbishment work and will require pre-completion testing to show compliance with Building Regulation requirements.

RW Semi Rigid & Rigid Slabs

Work on site

Handling and storage
ROCKWOOL RW slabs are light and easy to cut to any shape with a sharp knife. They are shrink wrapped in polyethylene and supplied on pallets which are shrouded with a waterproof hood suitable for outside storage.

Maintenance
Once installed the ROCKWOOL RW slabs need no maintenance.

Sustainability

As an environmentally conscious company, ROCKWOOL promotes the sustainable production and use of insulation and is committed to a continuous process of environmental improvement.

4 in 1

All ROCKWOOL products provide outstanding thermal protection as well as four added benefits:

- **Fire resistance**
- **Acoustic comfort**
- **Sustainable materials**
- **Durability**

Health & Safety

The safety of ROCKWOOL stone wool is confirmed by current UK and Republic of Ireland health & safety regulations and EU directive 97/69/EC:ROCKWOOL fibres are not classified as a possible human carcinogen. A Material Safety Data Sheet is available and can be downloaded from www.rockwool.co.uk to assist in the preparation of risk assessments, as required by the Control of Substances Hazardous to Health Regulations (COSHH).

Environment

Made from a renewable and plentiful naturally occuring resource, ROCKWOOL insulation saves fuel costs and energy in use and relies on trapped air for its thermal properties.

ROCKWOOL insulation does not contain (and has never contained) gases that have ozone depletion potential (ODP) or global warming potential (GWP).

ROCKWOOL is approximately 97% recyclable.
For waste ROCKWOOL material that may be generated during installation or at end of life, we are happy to discuss the individual requirements of contractors and users considering returning these materials to our factory for recycling.

Interested?

For further information, contact the
Technical Solutions Team on 01656 868621
or email technical.solutions@rockwool.co.uk

Visit www.rockwool.co.uk to view our complete range of products and services.

Copyright ROCKWOOL February 2015

ROCKWOOL® Limited
Pencoed
Bridgend
CF35 6NY

info@rockwool.co.uk
www.rockwool.co.uk

ROCKWOOL Limited reserves the right to alter or amend the specification of products without notice as our policy is one of constant improvement. The information contained in this data sheet is believed to be correct at the date of publication.

Whilst ROCKWOOL will endeavour to keep its publications up to date, readers will appreciate that between publications there may be pertinent changes in the law, or other developments affecting the accuracy of the information contained in this data sheet.

The above applications do not necessarily represent an exhaustive list of applications for ROCKWOOL RW Slabs.

ROCKWOOL Limited does not accept responsibility for the consequences of using ROCKWOOL RW Slabs in applications different from those described within this data sheet. Expert advice should be sought where such different applications are contemplated, or where the extent of any listed application is in doubt.